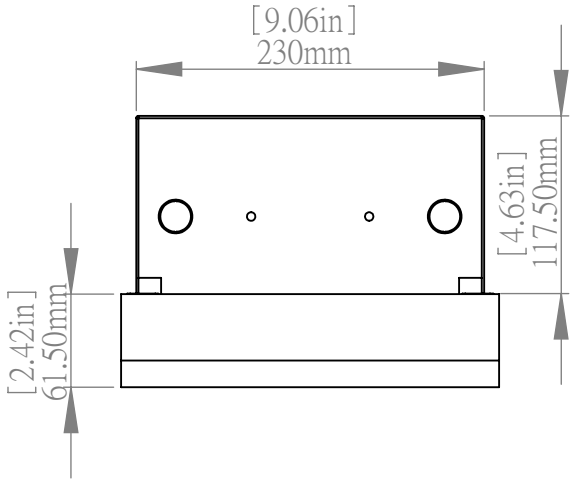
[9.06in]
230mm
[4.63in]
117.50mm
[2.42in]
61.50mm

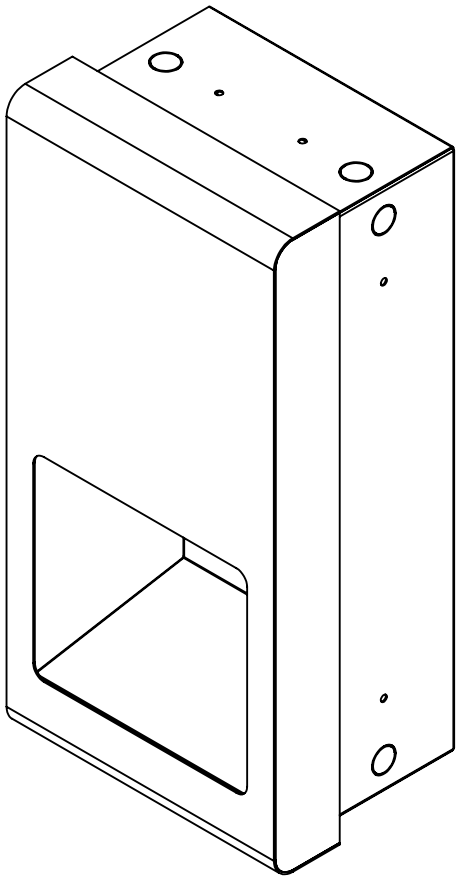

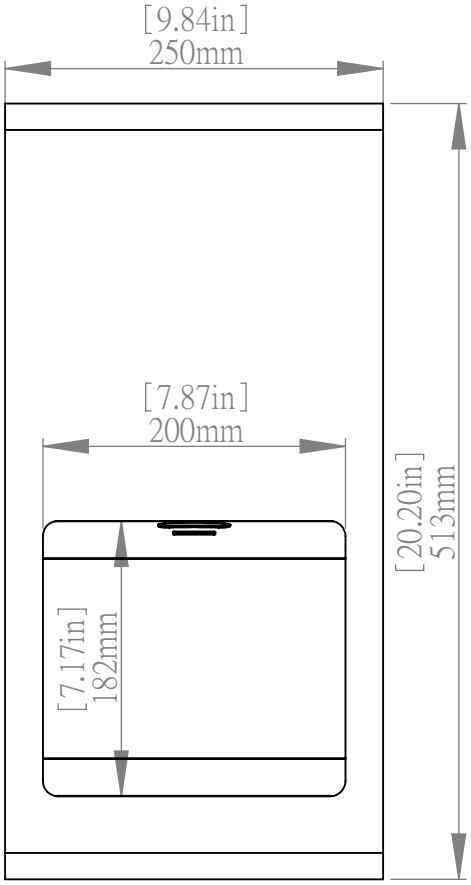
[9.84in]
250mm
[7.87in]
200mm
[7.17in]
182mm
[20.20in]
513mm

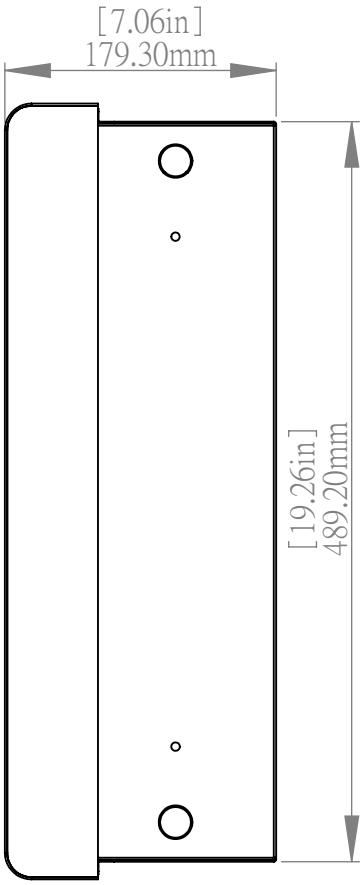
[7.06in]
179.30mm
[19.26in]
489.20mm